JUMBO

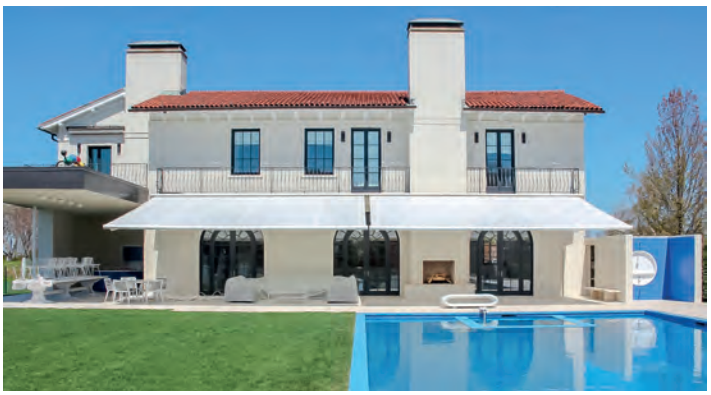

BALCONY & TERRACE

SHADED AREAS COVER UP TO 90 SQUARE METRES

STOBAG

www.stobag.com

JUMBO S2160/2

Telescopic arm technology

- Shading of large areas up to 90 m²
- Projection up to max. 500 cm
- High rigidity and flexible bracket distribution thanks to 4-edge back bar
- Cover remains consistently taut and high thanks to telescopic arm technology
- Improved width / projection ratio
- Self-aligning bearings for the roller shaft guarantee optimum cover winding
- Awning incline adjustable from 5° to 22°
- Optional top board available
- Optional Valance provides additional shade and hides the awning arms from view

min. 395 cm
max. 1800 cm

min. 350 cm
max. 500 cm

CLASS 2 BEAUFORTS

The wind resistance class can vary depending on version and dimension.

Technical dimensions in millimetres

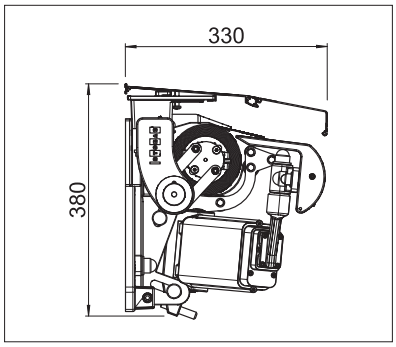

Wall installation with top board

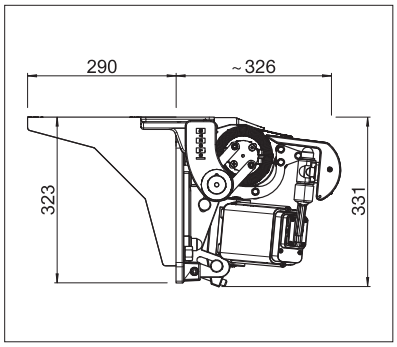

Ceiling mounting with ceiling bracket

EN 13561

5 YEARS STOBAG WARRANTY

REGISTRATION REQUIRED

COLORS
Discover the diverse options when selecting frame colors.

FABRICS
Choose from a comprehensive range of materials and colors.

ELECTRICS
More convenience thanks to the automated control and lighting systems.

More information at www.stobag.com

Art.# **257684** – 2020-01 – © STOBAG – Subject to change. Depending on the country or region, the technical details, scope of delivery, guarantee conditions, design and availability may differ from the specifications contained in this document.